DocuSign Envelope ID: 6940ECCD-AA31-4D8E-A651-763A930D03EA

8/17/99

REVISIONS

PAVEMENT SCHEDULE	
C1	PROP. APPROX. 1.5″ ASPHALT CONCRETE SURFACE COURSE, TYPE S9.5B, AT AN AVERAGE RATE OF 165 LBS. PER SQ. YD.
E1	PROP. APPROX. 5″ ASPHALT CONCRETE BASE COURSE, TYPE B25.0C, AT AN AVERAGE RATE OF 570 LBS. PER SQ. YD.
T	EARTH MATERIAL.
U	EXISTING PAVEMENT.
V	MILLING BITUMINOUS PAVEMENT. (SEE MILLING DETAIL)

NOTE: PAVEMENT EDGE SLOPES ARE 1:1 UNLESS SHOWN OTHERWISE.

NOTES TO CONTRACTOR

Perform the work in accordance with Section 607 of the January 2018 North Carolina Department of Transportation Standard Specifications for Roads and Structures. Resurfacing will be accomplished at the same time as the milling operation.

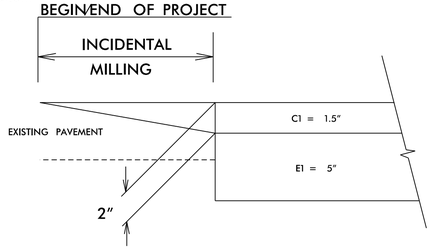

NOTE: UTILIZE INCIDENTAL MILLING TO MAKE PAVEMENT TIE-INS

WETHERILL ENGINEERING
1223 Jones Franklin Rd.
Raleigh, N.C. 27606
Liscense No. F-0377
Bus: 919 851 8077
Fax: 919 851 8107
TRANSPORTATION PLANNING/DESIGN - BRIDGE/STRUCTURE DESIGN
CIVIL/SITE DESIGN - GIS/GPS - CONSTRUCTION OBSERVATION

PROJECT REFERENCE NO.	SHEET NO.
5B.2032145	2A-1
R/W SHEET NO.	

ROADWAY DESIGN ENGINEER
2/28/2023
NORTH CAROLINA PROFESSIONAL SEAL 018981 ENGINEER R. K. MURPHY, JR.

DOCUMENT NOT CONSIDERED FINAL UNLESS ALL SIGNATURES COMPLETED

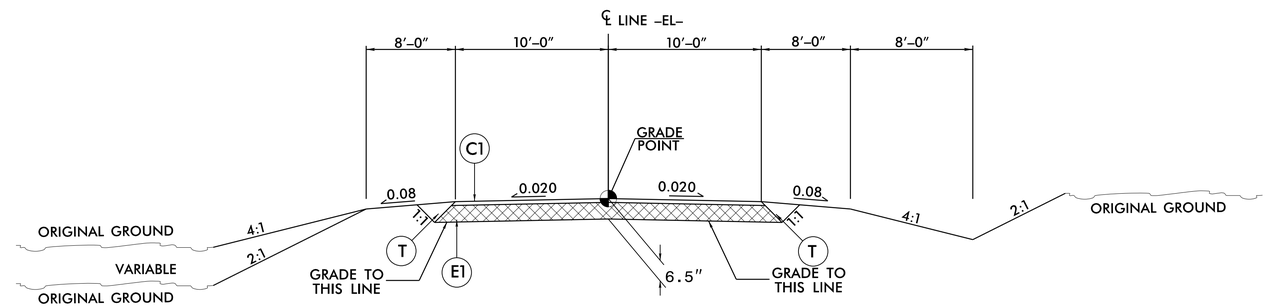

TYPICAL SECTION WITHIN EXCAVATION

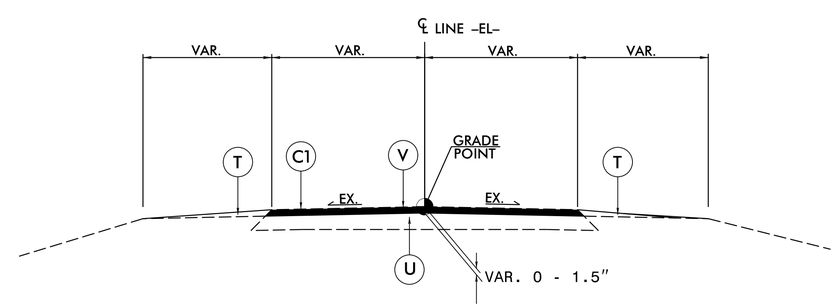

V: MILLING DETAIL

2/28/2023
5B.2032145_Ferrall Rd_rdy_psh 2A-1.dgn
USER: KENFTY